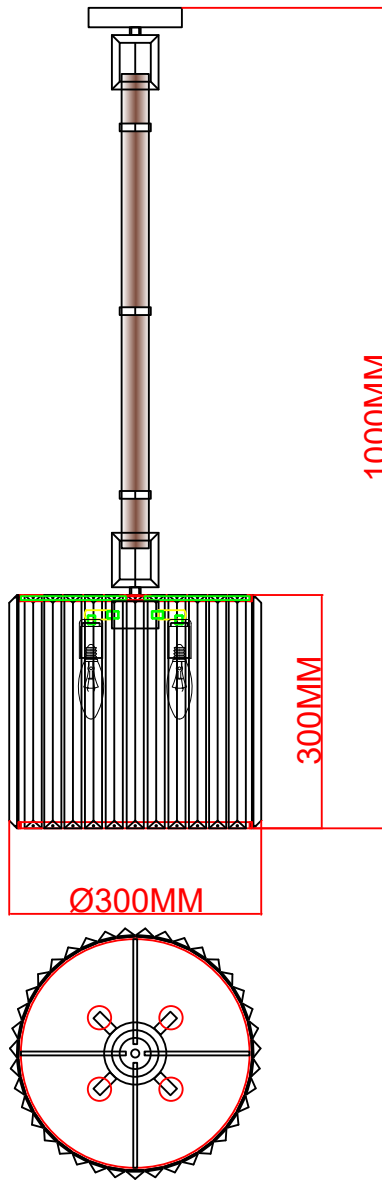
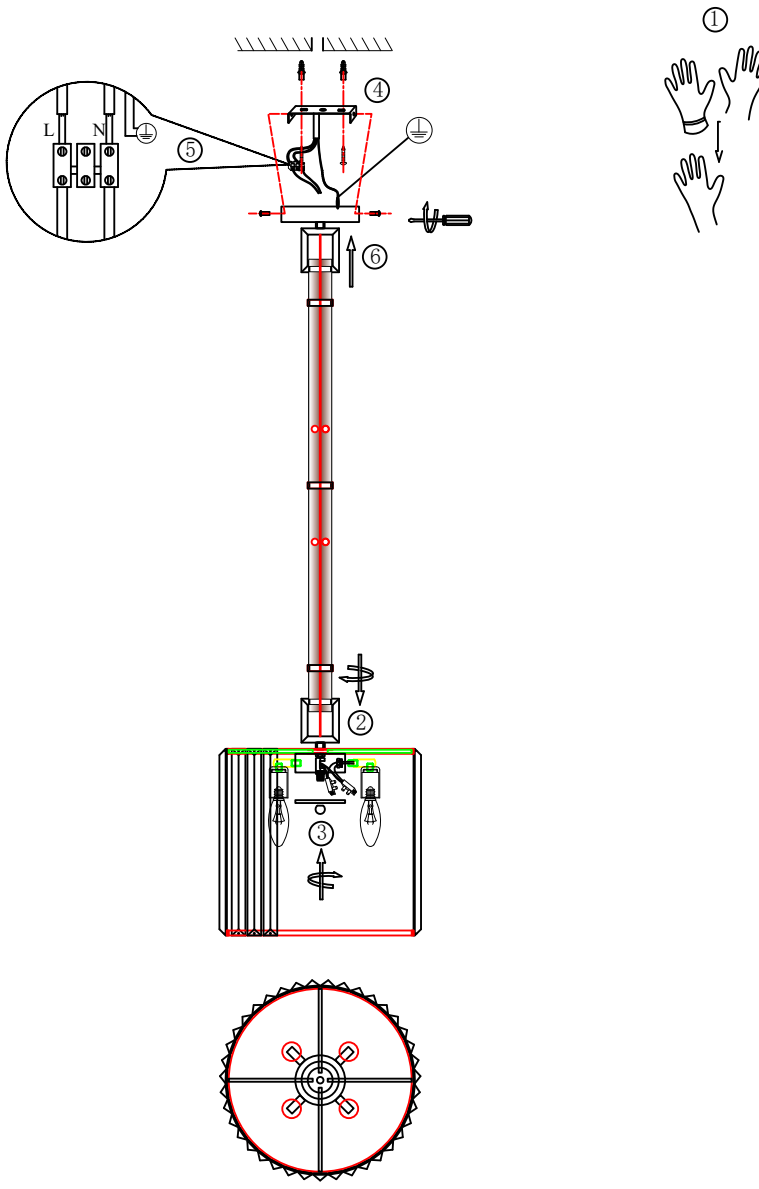
MODEL:3054-304